Driver and Event

Name	Ritchie Reynolds
Date	Oct-Nov 2008
Event	TRCR Fall Series
Weather	Indoor
Result	Leading point series

Track Conditions

Grip Level	High
Surface	Hard Packed Clay
Track Condition	Hard Packed, Very Technical
Temperature	70 degrees

Electrics

E.S.C	Speed Passion GT
Servo	JR 4800
Reciever	Spektrum 3001
Type of Cells	Core 5000 LiPo
Motor	Speed Passion 8.5
Spur	80
Pinion	31
Internal Ratio	2.6

Wheels-Tyres-Inserts

Front Wheels	Yokomo
Front Inserts	Bomb One
Front Tyres	Panther Switch 2.0
Rear Wheels	Proline
Rear Inserts	Bomb One
Rear Tyres	Panther Switch 2.0

Transmission

Rear Diff Height	Low
Front Diff Height	Low
Front Layshaft Pulley	Spool
Front Drive	Diff
Front Overdrive	Diff

Notes

#56 hole drilled with finger drill in rear shock pistons

Issue 2

Rear Suspension

Wheelbase	Short ☐	Medium ☒	Long ☐
Roll Bar	No ☒	1.2 ☐	1.4 ☐	1.6 ☐

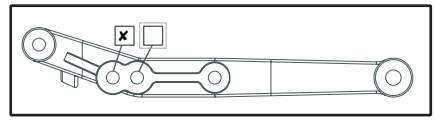

Equal Washers = 0° Toe-in
0.50 Difference = 0.65° Toe-in
1.00 Difference = 1.30° Toe-in
1.50 Difference = 1.95° Toe-in
2.00 Difference = 2.60° Toe-in
2.50 Difference = 3.25° Toe-in
3.00 Difference = 3.90° Toe-in

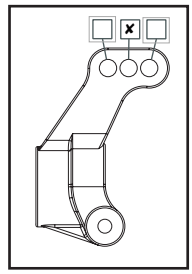

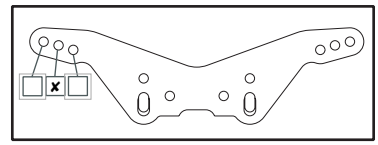

37.5mm ☐ 43mm ☐ 49mm ☒

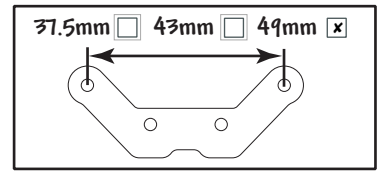

Toe-in / Rear Track Washers

Rear 3 mm	Front .5 mm	Actual 3.25°

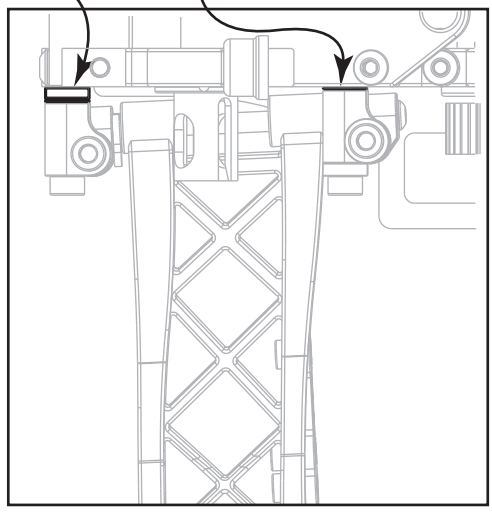

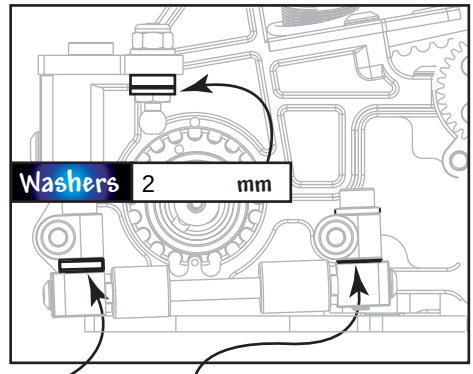

Washers 2 mm

Rear 1 mm	Front .5 mm	Actual .65°

Anti-Squat Washers

Note: The Anti-Squat Angle is worked out using the Toe-In Chart Above, as the washers produce the same angles.

Front Suspension

Front Track Washers

Rear 2 mm	Front 2 mm

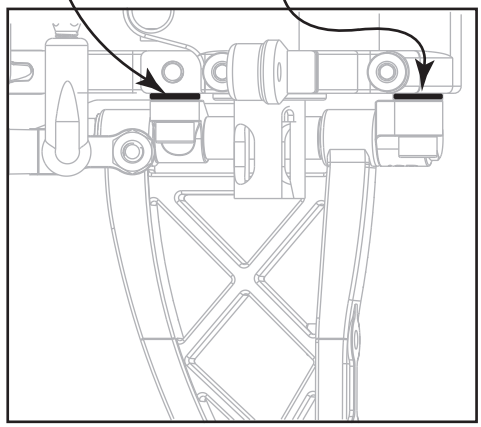

Washers 4 mm

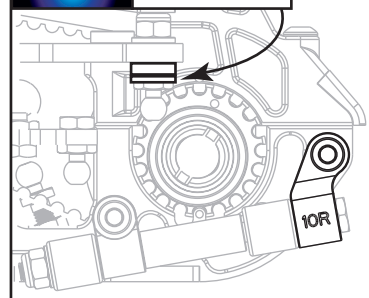

Front Rake 10 Deg ☐ 7.5 Deg ☒

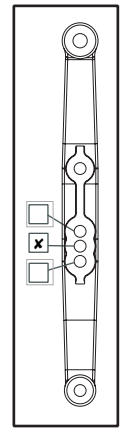

Roll Bar	No ☒	1.2 ☐	1.4 ☐	1.6 ☐

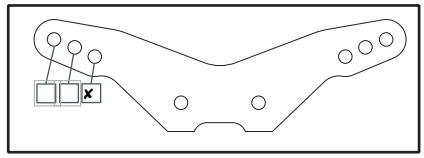

Washers 1 mm

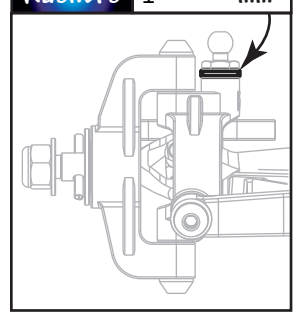

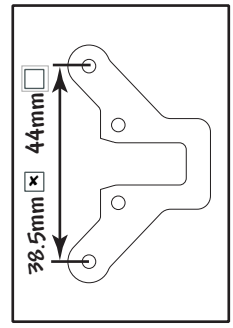

Rear Shocks

Oil	30	Piston	2 hole ☐ 3 hole ☒
Springs	Yokomo BX Pink		
Diaphragm Spec	Open		

Shock Length 95 mm

Front Shocks

Oil	30	Piston	2 hole ☐ 3 hole ☒
Springs	AE Silver		
Diaphragm Spec	Open		

Shock Length 82 mm